Measurement and Instrumentation - BECS 22442

Supplementary list of problems

Tutorial # 01

1. (a) Define the following terms in the context of digital logic IC's.

   (i) Average propagation delay
   (ii) Power dissipation
   (iii) Figure of merit (FOM)
   (iv) Fan-out and Fan-in
   (v) Noise immunity

2. Consider the Resistor-Transistor Logic (RTL) inverter circuit shown in **Figure 1**. The transistor Q_1 has the following parameters: $\beta_F = 70$, $V_{BE(on)} = 0.7$ V, $V_{BE\ (sat)} = 0.8$ V and $V_{CE\ (sat)} = 0.1$ V.

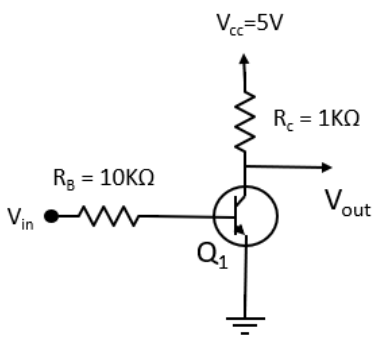

Figure 1

   (a) Draw the voltage transfer characteristic (VTC) curve for the inverter and clearly label all regions of operation.

   (b) Calculate the output high voltage (V_{OH}), output low voltage (V_{OL}), input low voltage (V_{IL}) and input high voltage (V_{IH}) for the given circuit.

   (c) Using the results from part (b), determine the low and high noise margins of the inverter.

   (d) Assume the output voltages of the given RTL gate (acting as the driving gate) when it is connected to N similar load gates. Using appropriate diagrams, determine the output voltages of the driving gate under input low and high conditions.

   (e) Calculate the maximum fanout of the RTL inverter circuit.

   (f) Under the condition of maximum fanout, compute the average power dissipation of the circuit.

3. Consider the two-input DTL logic gate circuit shown in **Figure 2**. Given the transistor parameters for Q_1 as $\beta_F = 25$, $V_{BE(sat)} = 0.7$ V, $V_{CE\,(sat)} = 0.2$ V, $V_\gamma = 0.7$ V.

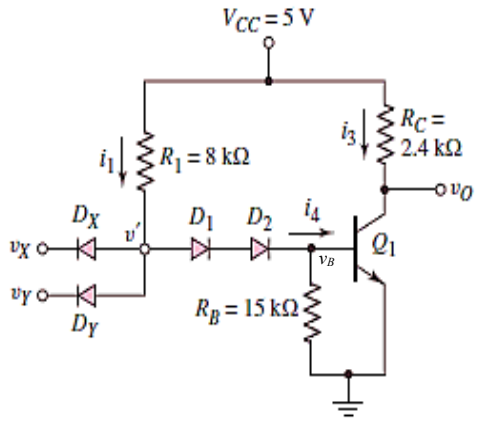

Figure 2

(a) Develop a truth table for the input and output signals to determine the type of gate. Clearly specify the state of each diode and transistor for every input condition.

(b) Determine the following for a no-load condition when both inputs (v_x , v_y) are set to a high state of 5 V and low state of 0.2 V.

  (i) The voltages at the base and collector in each transistor.

  (ii) The base and collector currents in each transistor.

(c) Validate the operational region of transistor Q_1 by analyzing your results under both conditions.

(d) Describe THREE advantages of DTL gates compared to conventional RTL gates.

4. Consider the two-input TTL logic gate circuit shown in **Figure 3**. Given the transistor parameters for Q_1, Q_2, and Q_3, as $\beta_F = 25$, $\beta_R = 0.1$, $V_{BE(sat)} = 0.7$ V, $V_{BE\,(on)} = V_{BC(on)} = 0.6$ V, and $V_{CE\,(sat)} = 0.2$ V

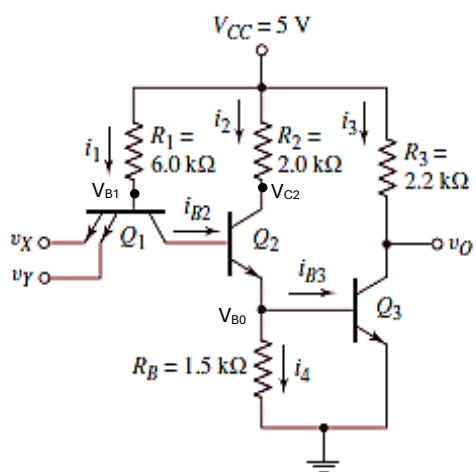

Figure 3

Measurement and Instrumentation - BECS 22442

Supplementary list of problems

(a) Create a truth table for the input and output signals to identify the type of gate. Clearly describe the state of each diode and transistor for every possible input condition.

(b) Determine the following for a no-load condition when both inputs (v_x , v_y) are set to a high state of 5 V and low state of 0.2 V.

  (i) The voltages at the base and collector in each transistor.

  (ii) The base and collector currents in each transistor.

(c) Explain the impact of "load capacitance" on this circuit's performance and suggest a modified design that effectively addresses this issue.

Due date – 25th of November 2024